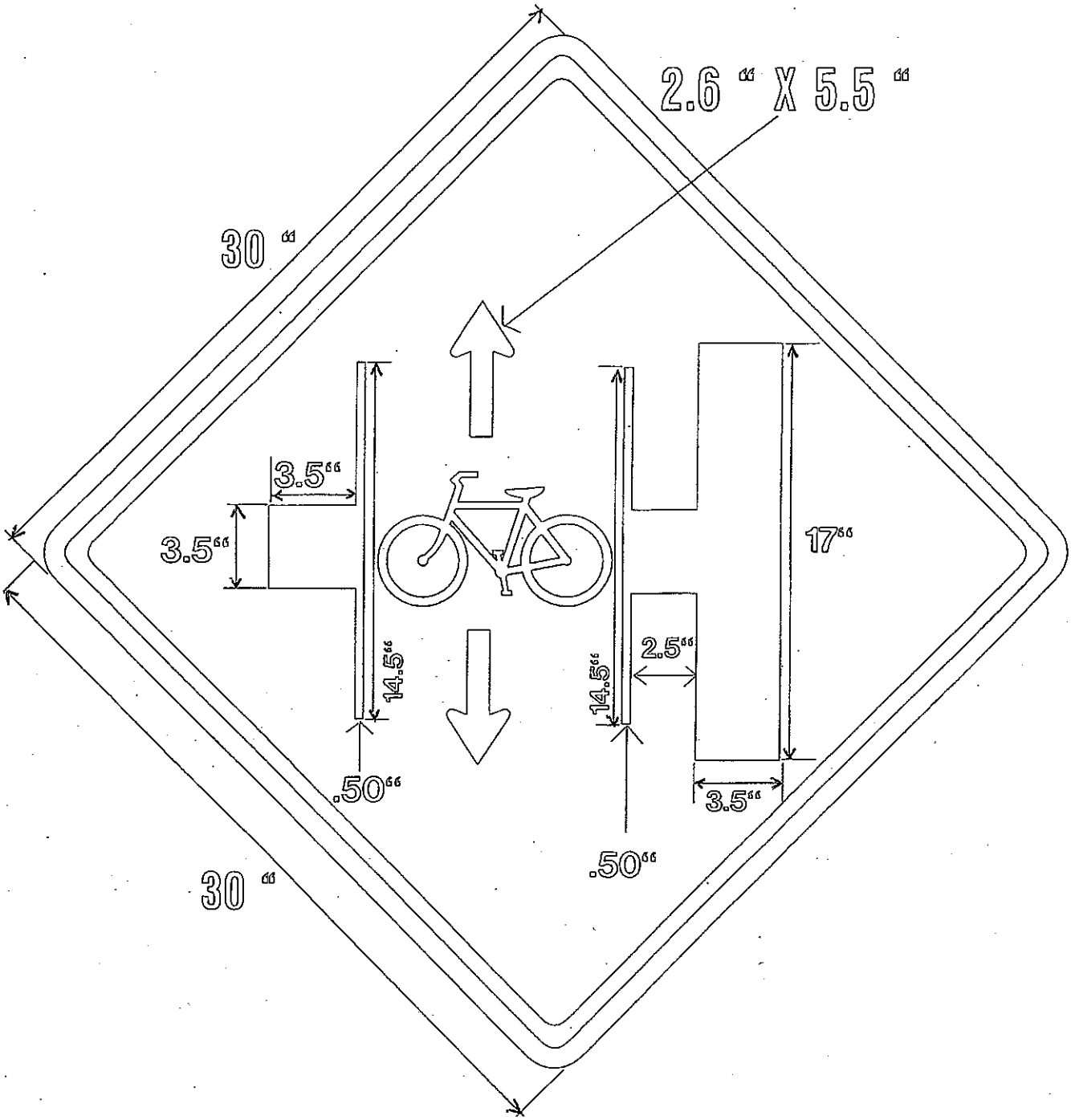

FLUORESCENT YELLOW GREEN VIP SHEETING
WITH BLACK COPY AND BORDER.
FYG BORDER IS .50 " BLACK INSET BORDER IS .75 "
BIKE IS 9.6 " X 5.5 "

W2-2 Bike Left 30