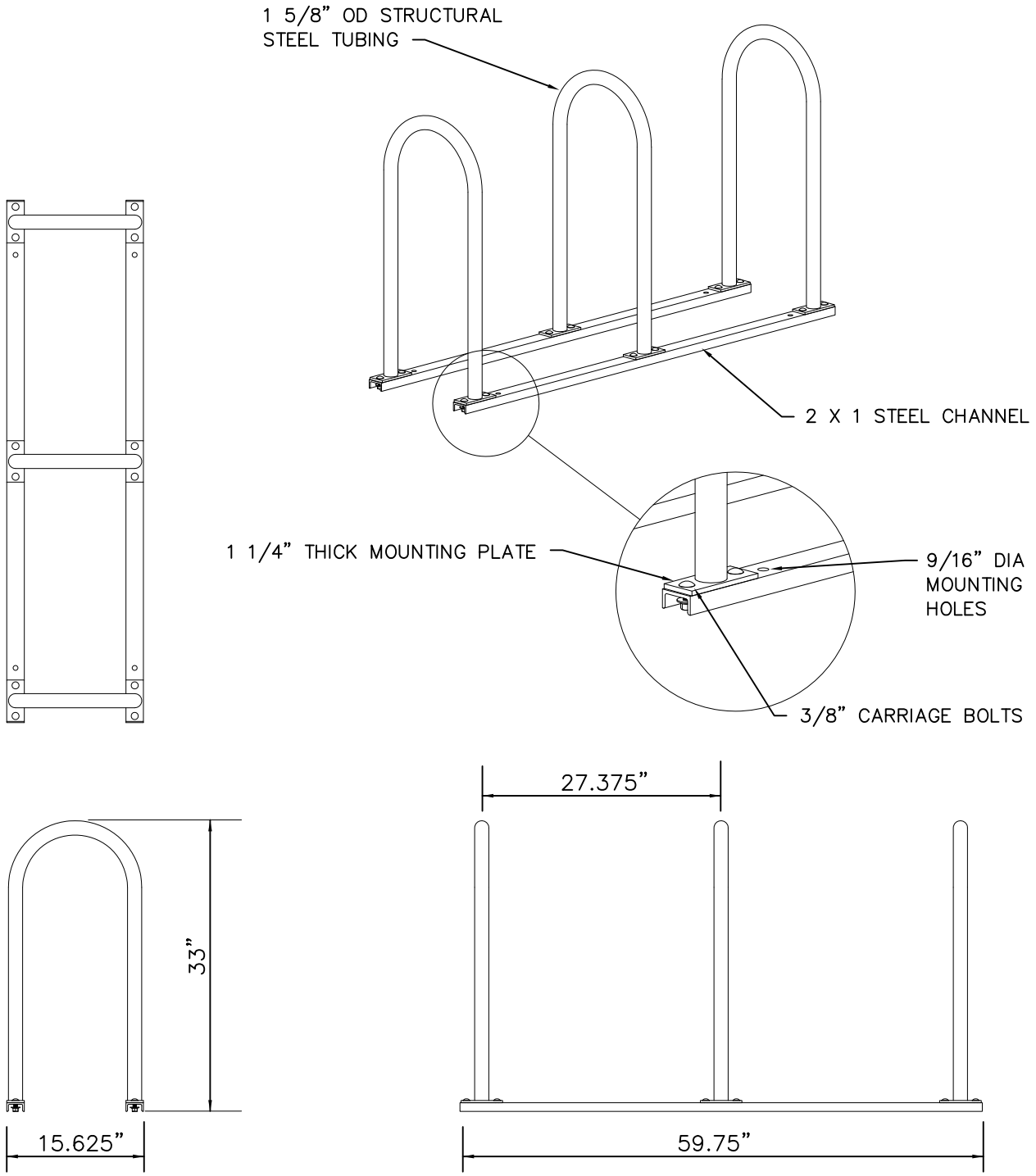

DRAWN BY: BG

CHECKED BY: MR

APPROVED BY:
DIRECTOR OF PUBLIC WORKS

CITY OF BOULDER, COLORADO

INVERTED "U" BICYCLE RACKS ON RAILS

ISSUED: DEC. 6, 2014

REVISED:

DRAWING NO.

2.53